Venus

About Hills United

Our ranges of bathroom accessories are made from 304 Stainless Steel and are offered to the market at the most affordable pricing. The quality is guaranteed and our designs are simple but practical. We also offer customized options in lengths of rails, as we are a manufacturer and not an importer.

Our key advantage is that we always have stock, and if for some reason we have to manufacture some stock items, it takes a couple of days relative to the size of the order.

We offer our ranges in brushed or polished stainless steel as well as matt black powder coated stainless steel. We also offer contractors ranges that are as elegant as the others, with slight differences to make it more affordable.

We offer a complete turn key solution to architects on all custom projects from mock up rooms to final product.

We pride ourselves on our service, and the quality of all our products, and the fact that it is all locally produced in Cape Town.

HILLS UNITED
www.hillsunited.com

Double towel rail 600

Dimensions given are in mm. Hills United® reserves the right to alter and/or remove designs from time to time without prior notice. This drawing is to be used for reference purposes only.

Copyright Hills United Trading ®

HILLS UNITED

Double towel rail 600

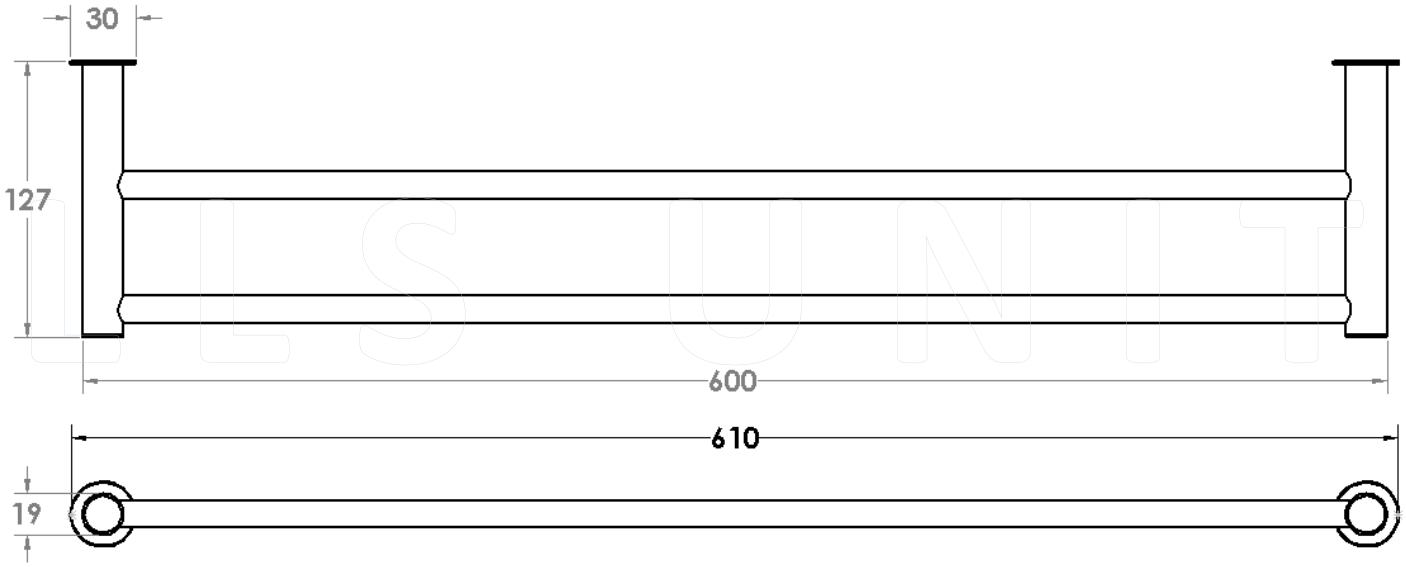

Dimensions given are in mm. Hills United® reserves the right to alter and/or remove designs from time to time without prior notice. This drawing is to be used for reference purposes only.

Copyright Hills United Trading ®

HILLS UNITED

Double towel rail 800

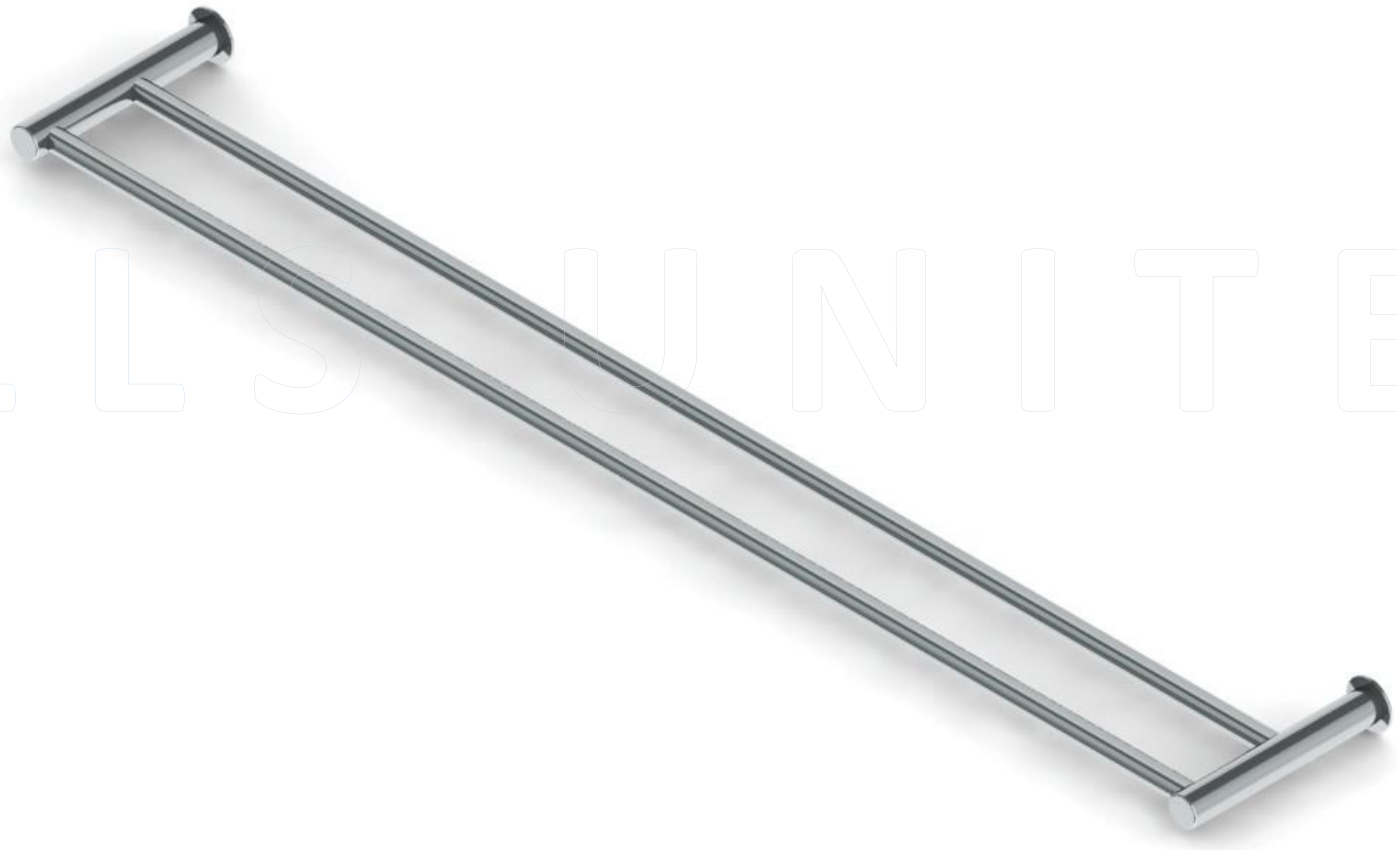

Dimensions given are in mm. Hills United® reserves the right to alter and/or remove designs from time to time without prior notice. This drawing is to be used for reference purposes only.

Copyright Hills United Trading ®

Double towel rail 800

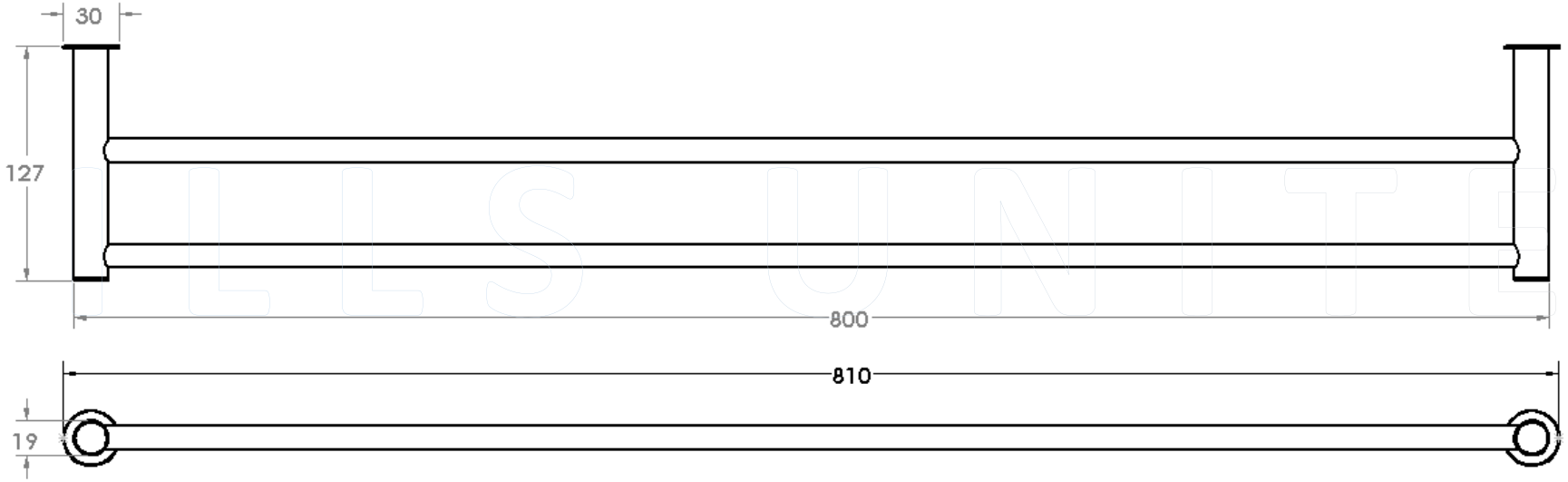

Dimensions given are in mm. Hills United® reserves the right to alter and/or remove designs from time to time without prior notice. This drawing is to be used for reference purposes only.

Copyright Hills United Trading ®

HILLS UNITED

Single towel rail 600

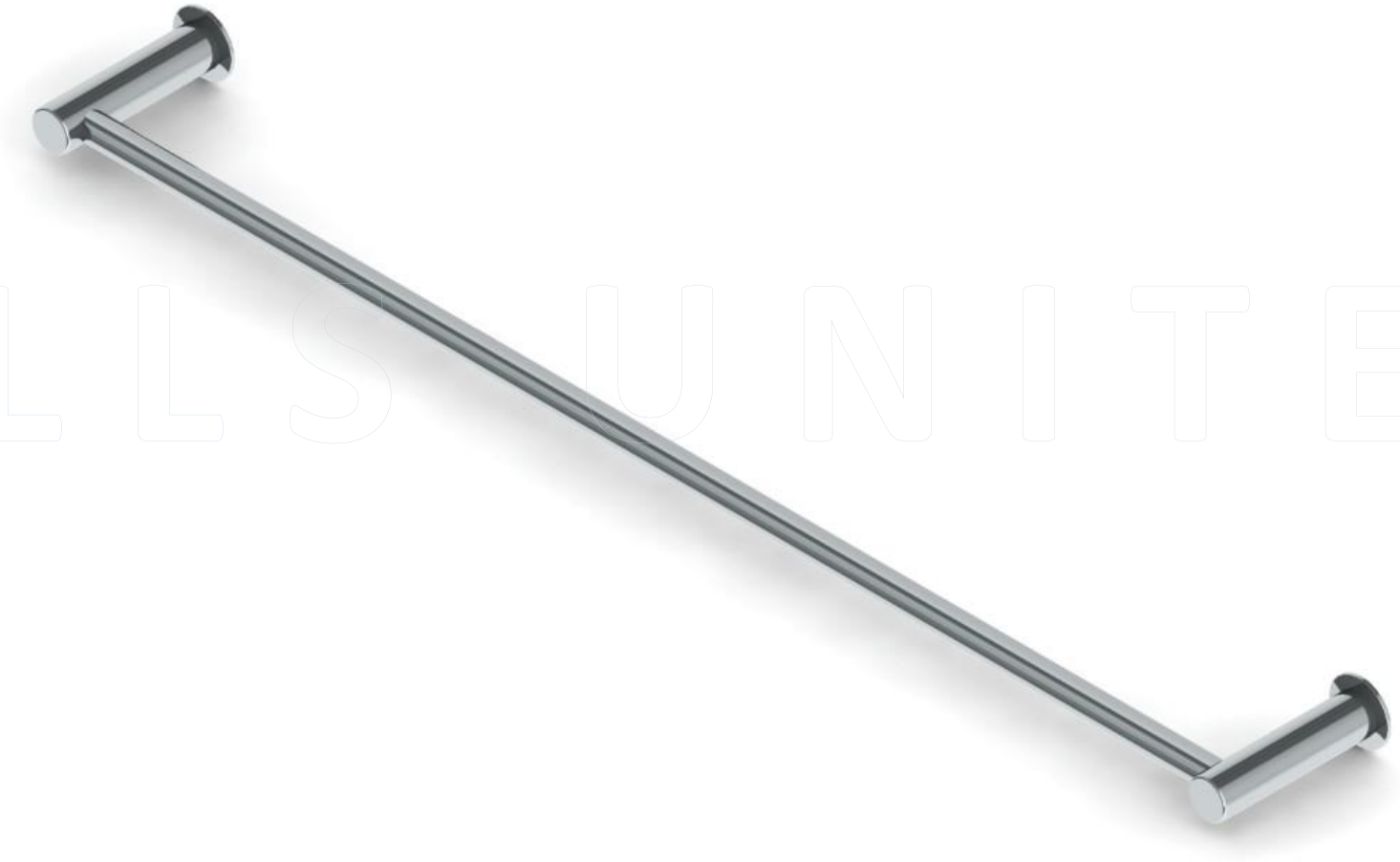

HILLS UNITED

304 Stainless Steel

10 Year Guarantee

Premium Quality Made in South Africa

Dimensions given are in mm. Hills United® reserves the right to alter and/or remove designs from time to time without prior notice. This drawing is to be used for reference purposes only.

Copyright Hills United Trading ®

HILLS UNITED
www.hillsunited.com

Single towel rail 600

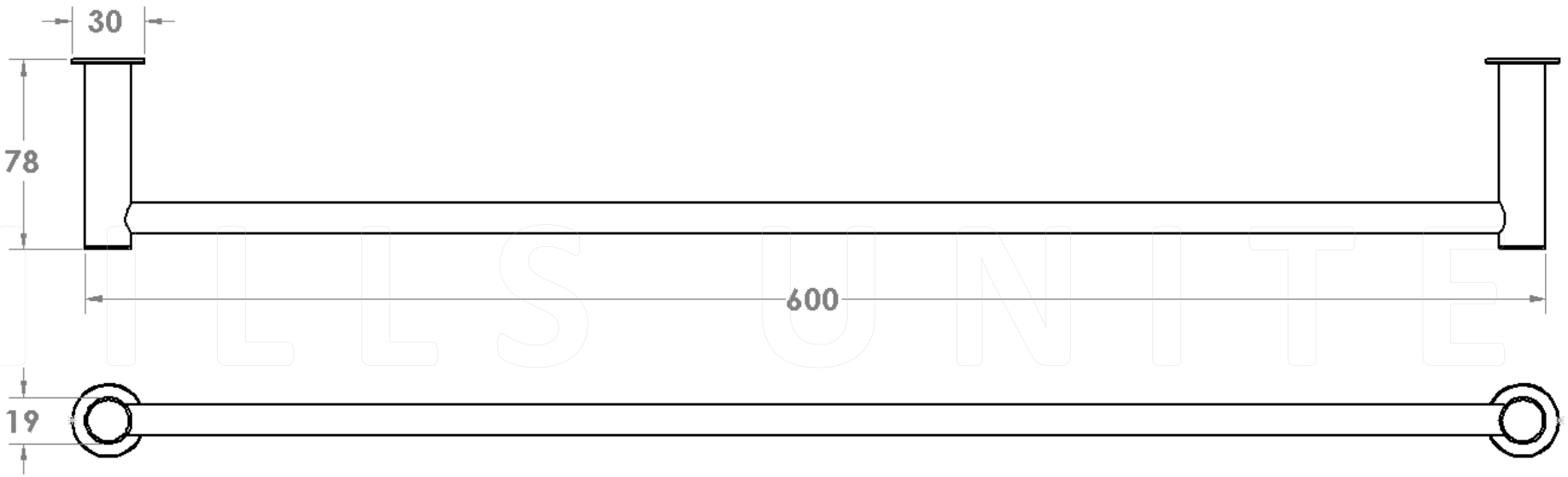

Dimensions given are in mm. Hills United® reserves the right to alter and/or remove designs from time to time without prior notice. This drawing is to be used for reference purposes only.

Copyright Hills United Trading ®

HILLS UNITED

Single towel rail 800

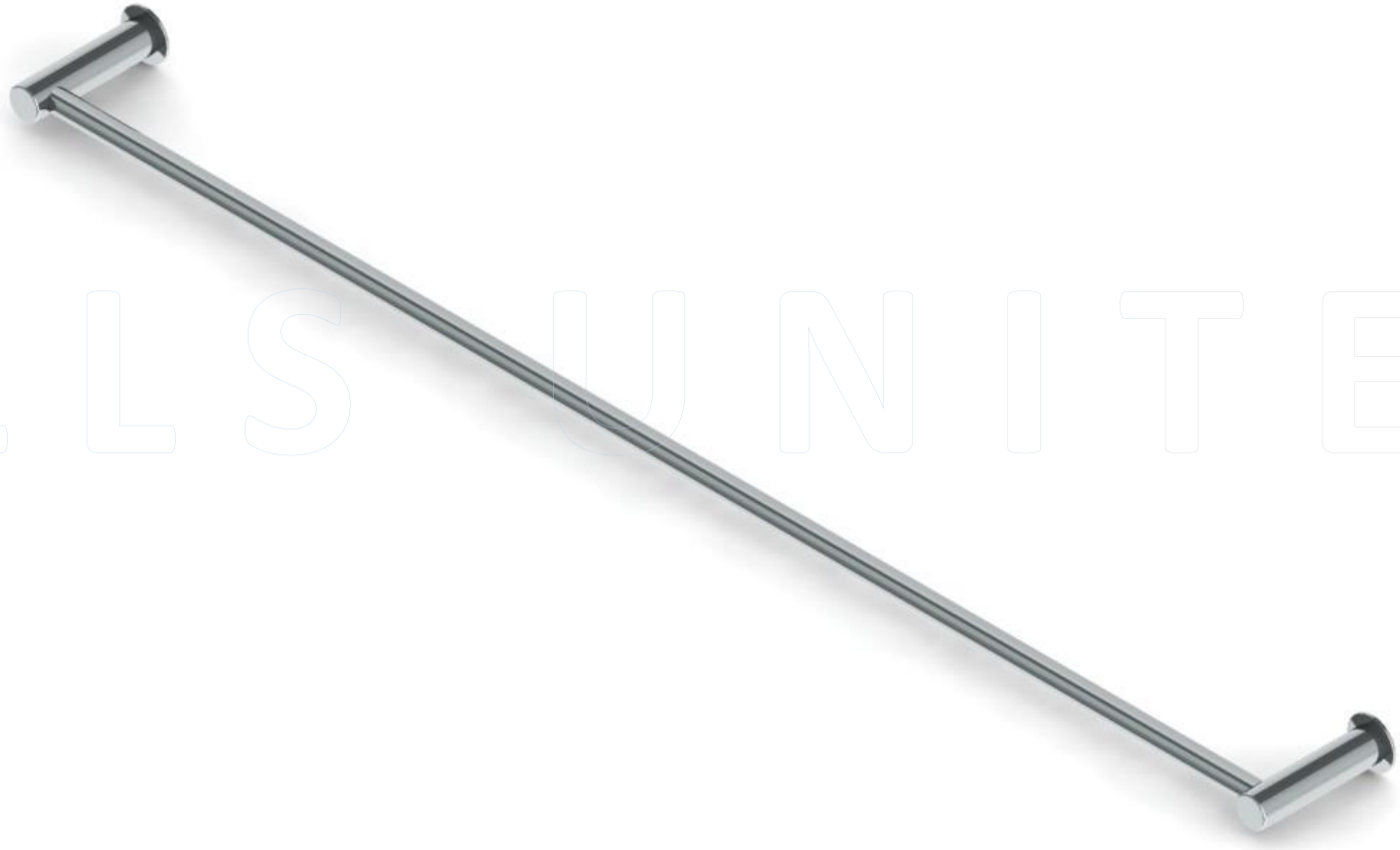

Dimensions given are in mm. Hills United® reserves the right to alter and/or remove designs from time to time without prior notice. This drawing is to be used for reference purposes only.

Copyright Hills United Trading ®

Single towel rail 800

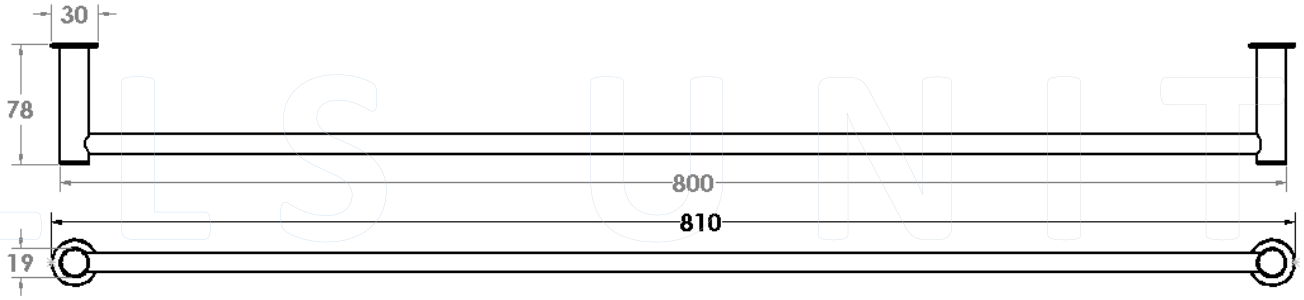

Dimensions given are in mm. Hills United® reserves the right to alter and/or remove designs from time to time without prior notice. This drawing is to be used for reference purposes only.

Copyright Hills United Trading ®

HILLS UNITED

Glass shelf

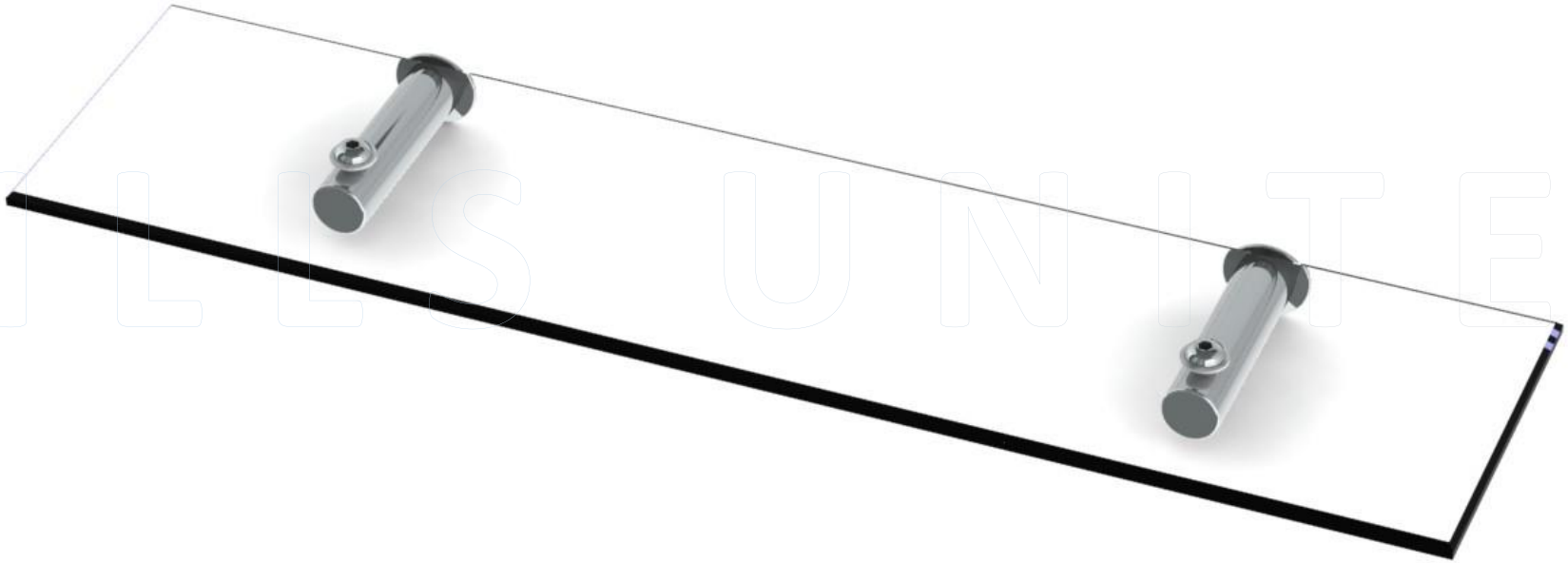

Dimensions given are in mm. Hills United® reserves the right to alter and/or remove designs from time to time without prior notice. This drawing is to be used for reference purposes only.

Copyright Hills United Trading ®

HILLS UNITED

Glass shelf

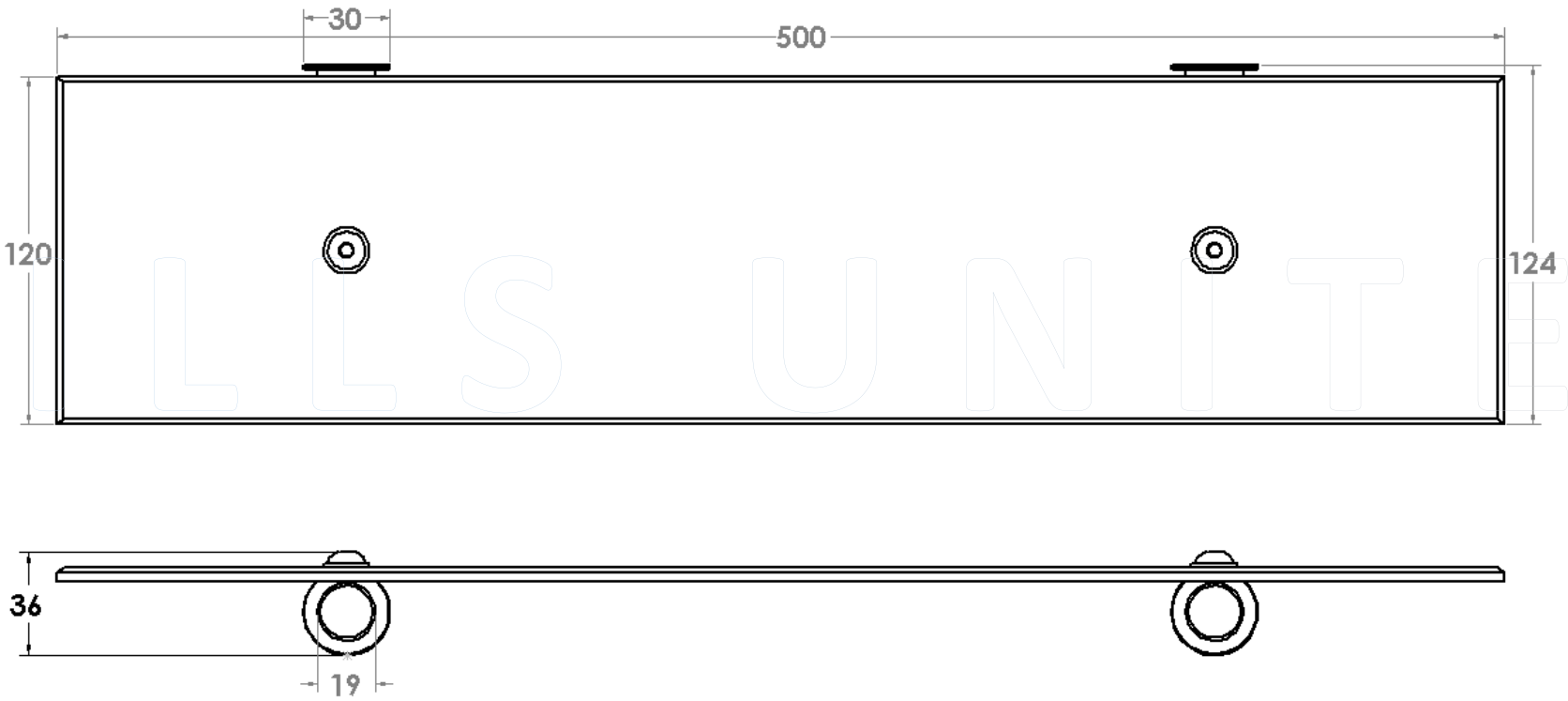

Dimensions given are in mm. Hills United® reserves the right to alter and/or remove designs from time to time without prior notice. This drawing is to be used for reference purposes only.

Copyright Hills United Trading ®

HILLS UNITED

Soap holder

Dimensions given are in mm. Hills United® reserves the right to alter and/or remove designs from time to time without prior notice. This drawing is to be used for reference purposes only.

Copyright Hills United Trading ®

HILLS UNITED

Soap holder

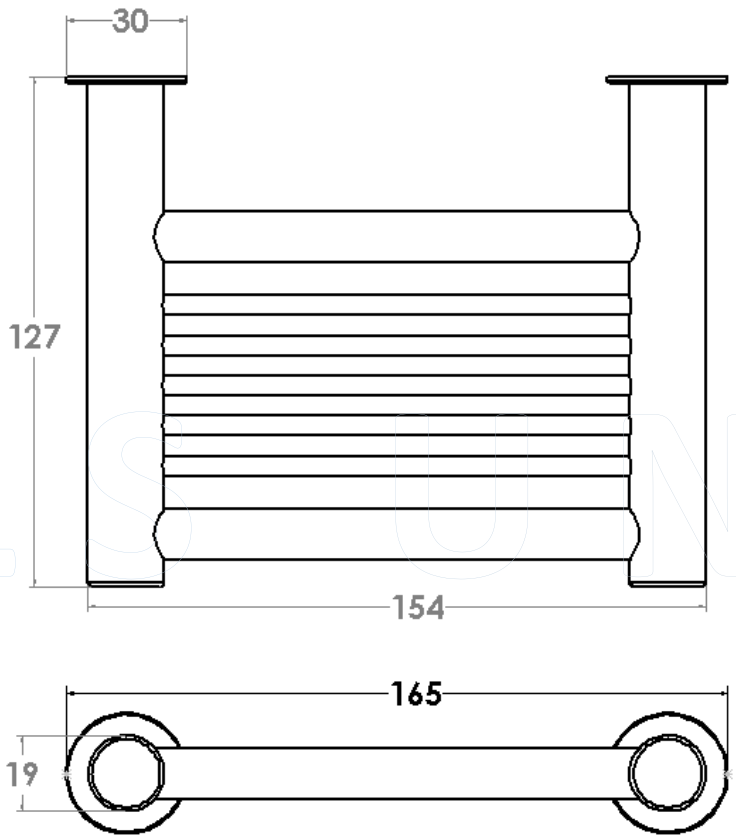

Dimensions given are in mm. Hills United® reserves the right to alter and/or remove designs from time to time without prior notice. This drawing is to be used for reference purposes only.

Copyright Hills United Trading ®

HILLS UNITED

Shower soap holder

Dimensions given are in mm. Hills United® reserves the right to alter and/or remove designs from time to time without prior notice. This drawing is to be used for reference purposes only.

Copyright Hills United Trading ®

HILLS UNITED

Shower soap holder

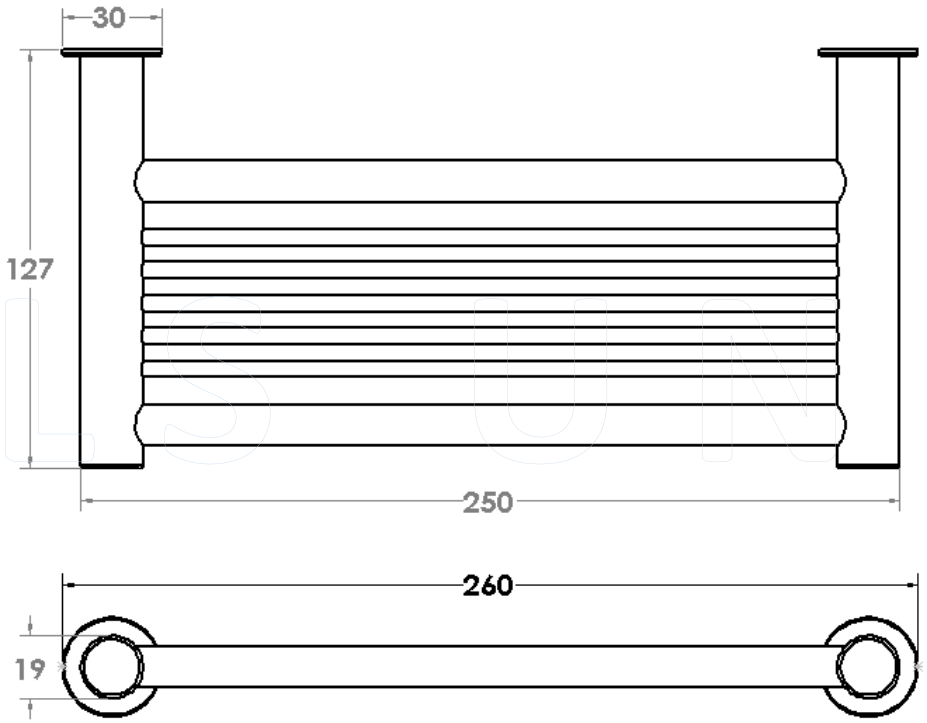

Dimensions given are in mm. Hills United® reserves the right to alter and/or remove designs from time to time without prior notice. This drawing is to be used for reference purposes only.

Copyright Hills United Trading ®

HILLS UNITED

Toilet paper holder

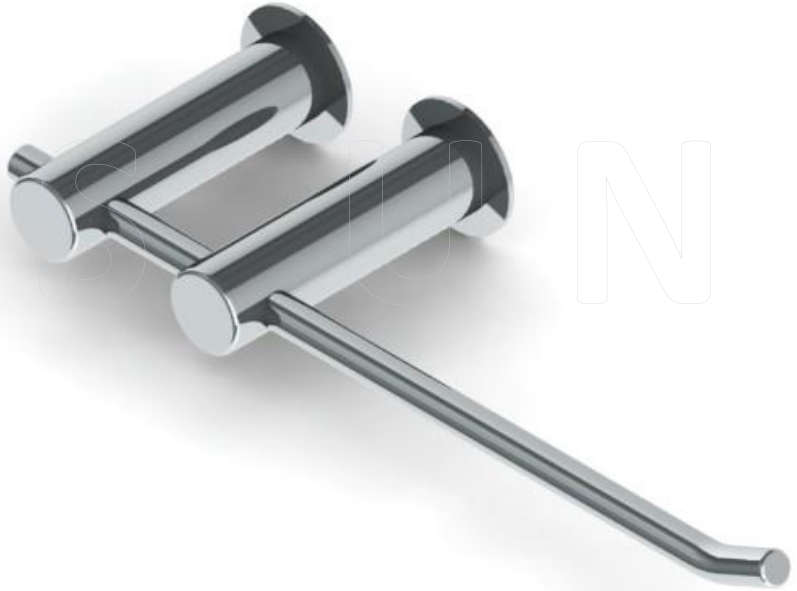

Dimensions given are in mm. Hills United® reserves the right to alter and/or remove designs from time to time without prior notice. This drawing is to be used for reference purposes only.

Copyright Hills United Trading ®

HILLS UNITED

Toilet paper holder

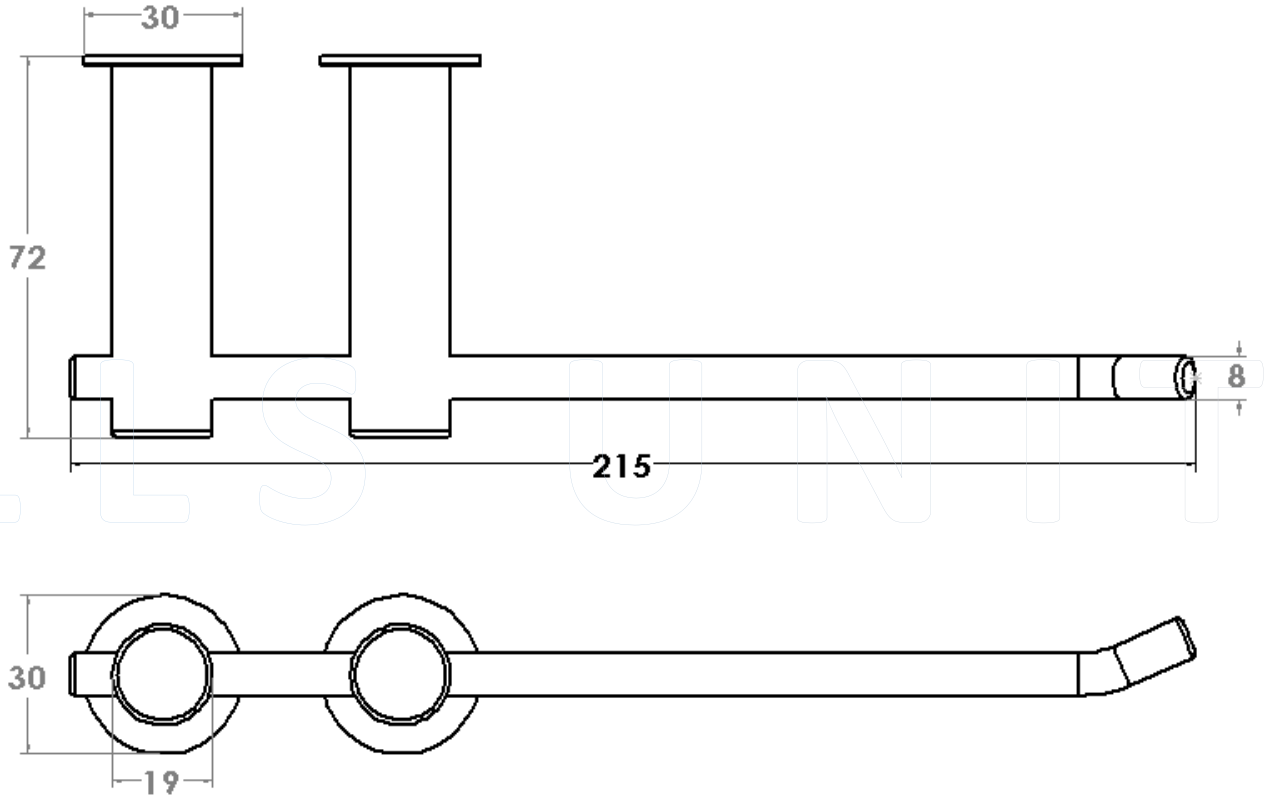

Dimensions given are in mm. Hills United® reserves the right to alter and/or remove designs from time to time without prior notice. This drawing is to be used for reference purposes only.

Copyright Hills United Trading ®

HILLS UNITED

Toilet paper holder

Dimensions given are in mm. Hills United® reserves the right to alter and/or remove designs from time to time without prior notice. This drawing is to be used for reference purposes only.

Copyright Hills United Trading ®

HILLS UNITED

Toilet paper holder

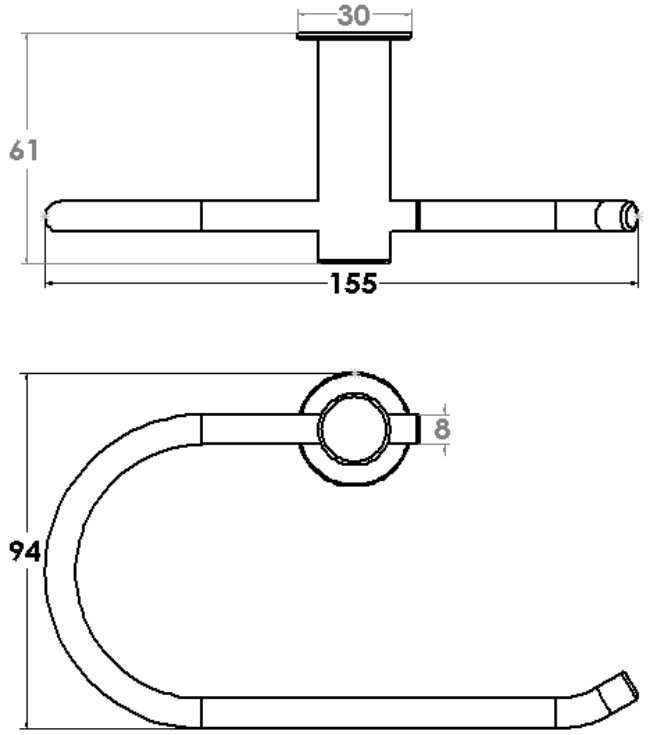

Dimensions given are in mm. Hills United® reserves the right to alter and/or remove designs from time to time without prior notice. This drawing is to be used for reference purposes only.

Copyright Hills United Trading ®

HILLS UNITED

Toilet paper holder

Dimensions given are in mm. Hills United® reserves the right to alter and/or remove designs from time to time without prior notice. This drawing is to be used for reference purposes only.

Copyright Hills United Trading ®

HILLS UNITED

Toilet paper holder

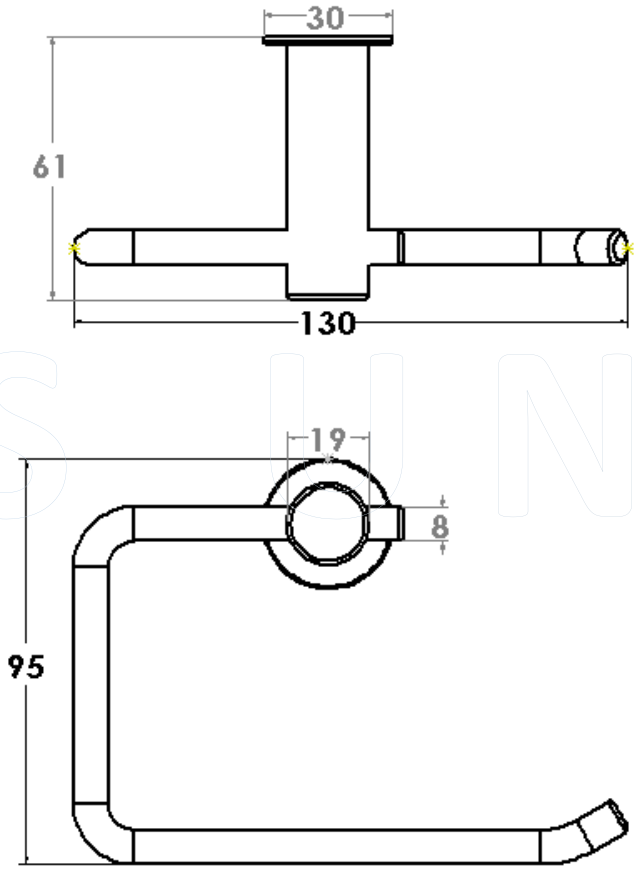

Dimensions given are in mm. Hills United® reserves the right to alter and/or remove designs from time to time without prior notice. This drawing is to be used for reference purposes only.

Copyright Hills United Trading ®

HILLS UNITED

Spare toilet paper holder

Dimensions given are in mm. Hills United® reserves the right to alter and/or remove designs from time to time without prior notice. This drawing is to be used for reference purposes only.

Copyright Hills United Trading ®

HILLS UNITED

Spare toilet paper holder

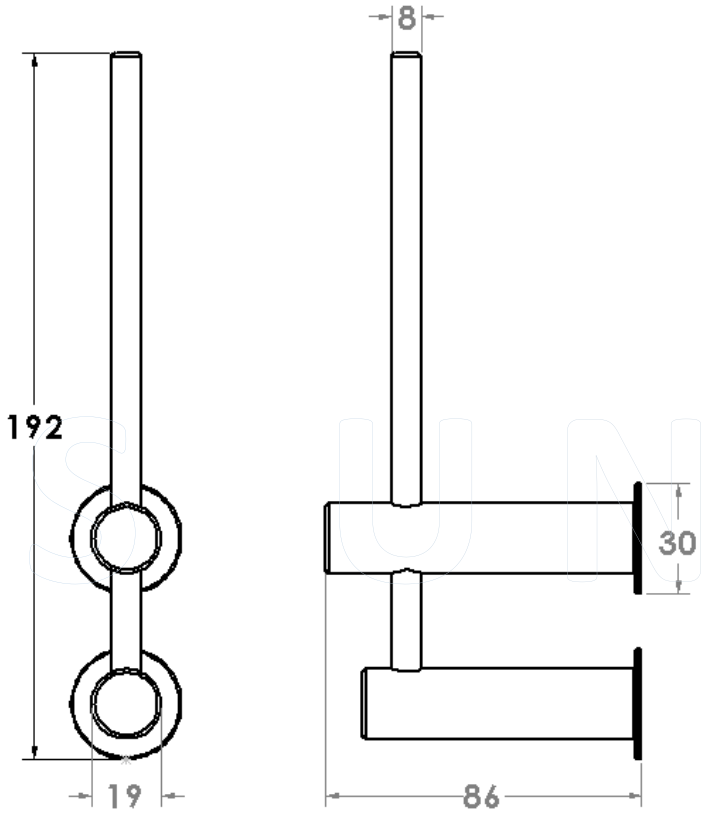

Dimensions given are in mm. Hills United® reserves the right to alter and/or remove designs from time to time without prior notice. This drawing is to be used for reference purposes only.

Copyright Hills United Trading ®

HILLS UNITED

Towel ring

Dimensions given are in mm. Hills United® reserves the right to alter and/or remove designs from time to time without prior notice. This drawing is to be used for reference purposes only.

Copyright Hills United Trading ®

HILLS UNITED

Towel ring

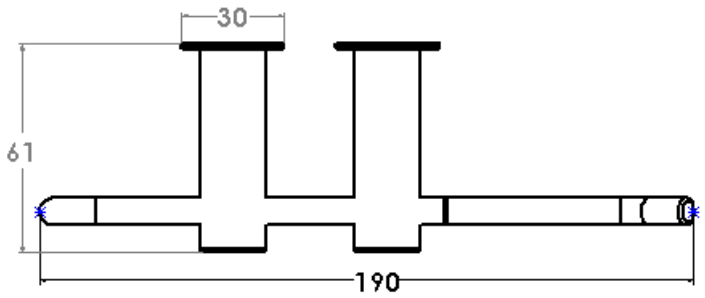

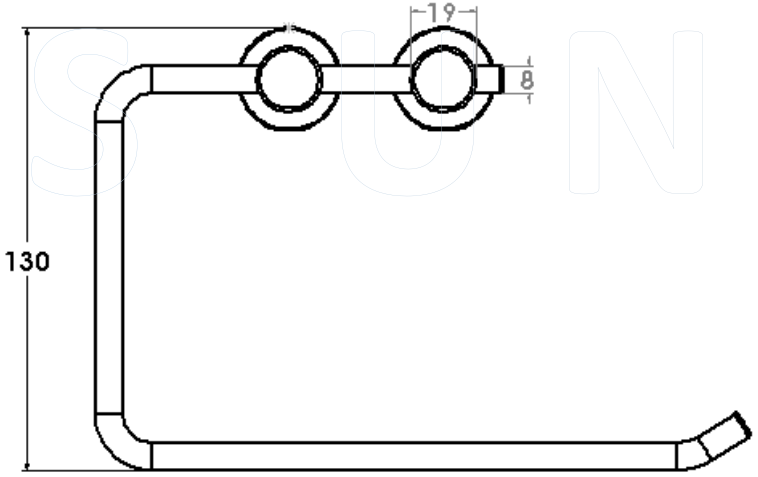

Dimensions given are in mm. Hills United® reserves the right to alter and/or remove designs from time to time without prior notice. This drawing is to be used for reference purposes only.

Copyright Hills United Trading ®

HILLS UNITED

Towel ring

Dimensions given are in mm. Hills United® reserves the right to alter and/or remove designs from time to time without prior notice. This drawing is to be used for reference purposes only.

Copyright Hills United Trading ®

HILLS UNITED

Towel ring

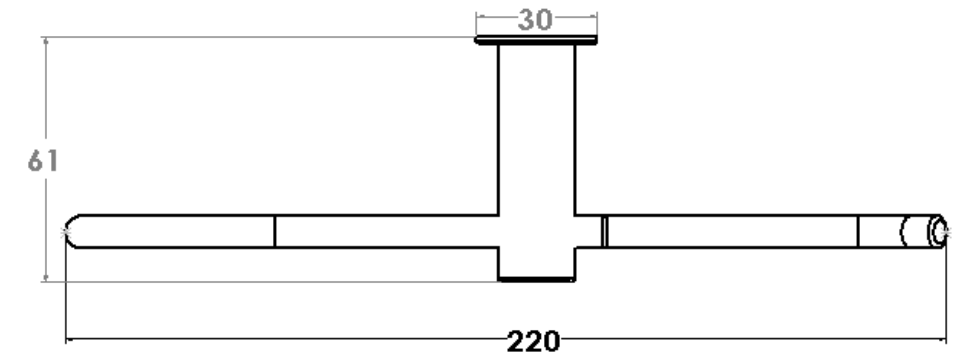

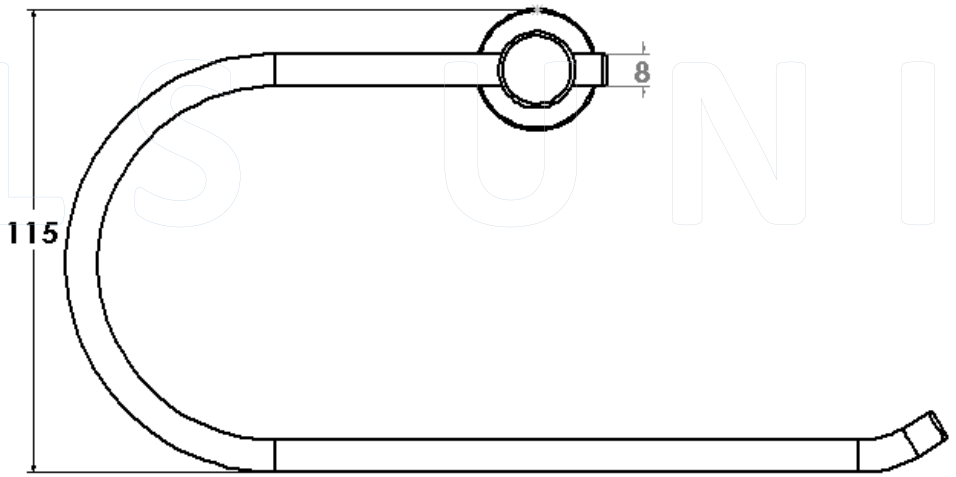

Dimensions given are in mm. Hills United® reserves the right to alter and/or remove designs from time to time without prior notice. This drawing is to be used for reference purposes only.

Copyright Hills United Trading ®

HILLS UNITED

Towel ring

Dimensions given are in mm. Hills United® reserves the right to alter and/or remove designs from time to time without prior notice. This drawing is to be used for reference purposes only.

Copyright Hills United Trading ®

HILLS UNITED

Towel ring

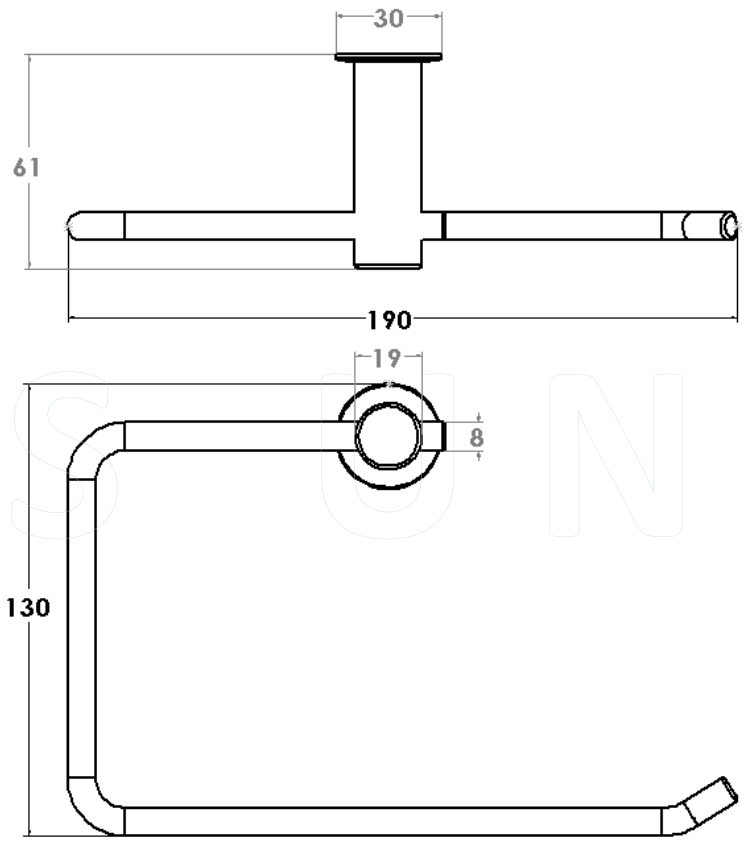

Dimensions given are in mm. Hills United® reserves the right to alter and/or remove designs from time to time without prior notice. This drawing is to be used for reference purposes only.

Copyright Hills United Trading ®

HILLS UNITED

Tooth brush tumbler

Dimensions given are in mm. Hills United® reserves the right to alter and/or remove designs from time to time without prior notice. This drawing is to be used for reference purposes only.

Copyright Hills United Trading ®

HILLS UNITED

Tooth brush tumbler

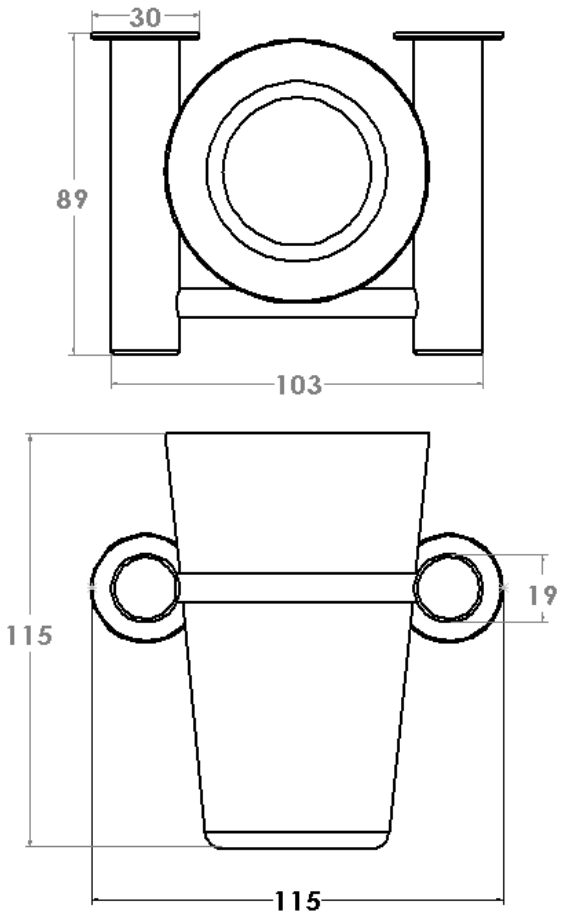

Dimensions given are in mm. Hills United® reserves the right to alter and/or remove designs from time to time without prior notice. This drawing is to be used for reference purposes only.

Copyright Hills United Trading ®

HILLS UNITED

Toilet brush holder

Dimensions given are in mm. Hills United® reserves the right to alter and/or remove designs from time to time without prior notice. This drawing is to be used for reference purposes only.

Copyright Hills United Trading ®

HILLS UNITED

Toilet brush holder

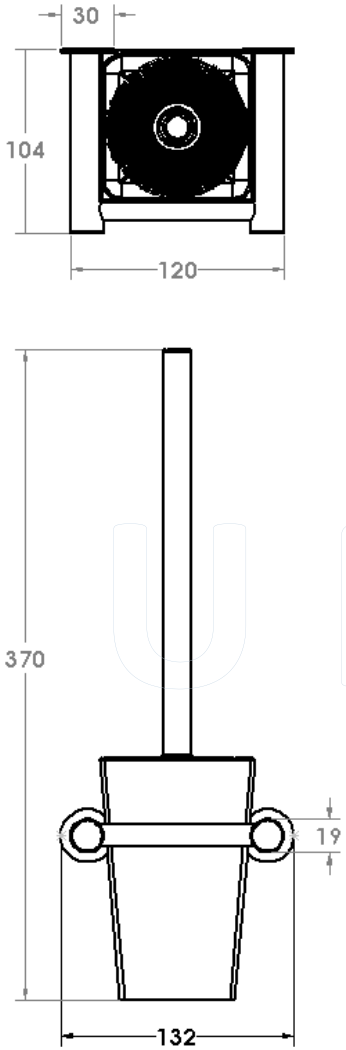

HILLS UNITED

Dimensions given are in mm. Hills United® reserves the right to alter and/or remove designs from time to time without prior notice. This drawing is to be used for reference purposes only.

Copyright Hills United Trading ®

HILLS UNITED

Robe hook

Dimensions given are in mm. Hills United® reserves the right to alter and/or remove designs from time to time without prior notice. This drawing is to be used for reference purposes only.

Copyright Hills United Trading ®

Robe hook

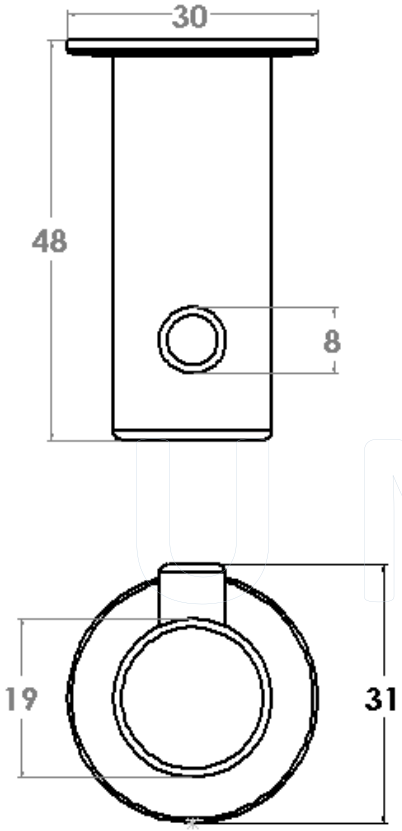

Dimensions given are in mm. Hills United® reserves the right to alter and/or remove designs from time to time without prior notice. This drawing is to be used for reference purposes only.

Copyright Hills United Trading ®

HILLS UNITED

Towel shelf

Dimensions given are in mm. Hills United® reserves the right to alter and/or remove designs from time to time without prior notice. This drawing is to be used for reference purposes only.

Copyright Hills United Trading ®

HILLS UNITED

Towel shelf

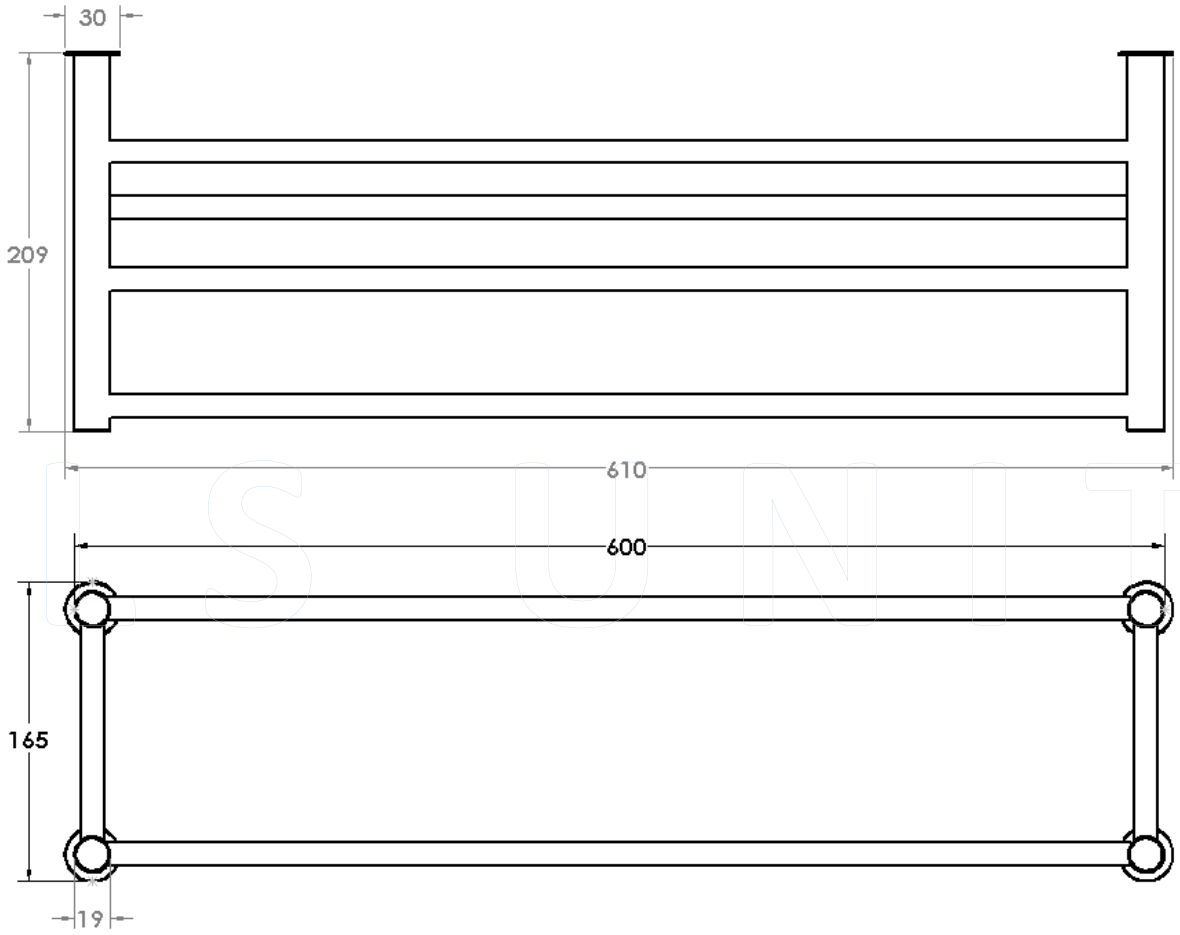

Dimensions given are in mm. Hills United® reserves the right to alter and/or remove designs from time to time without prior notice. This drawing is to be used for reference purposes only.

Copyright Hills United Trading ®

HILLS UNITED